DS-20-302

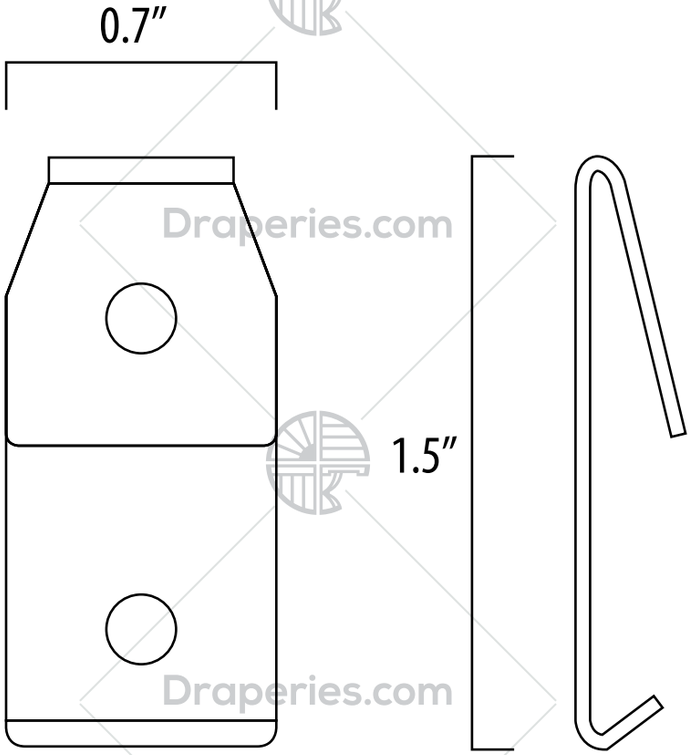

Draperies.com